Instruction for installation and use of LELK, LELT and LELM Emergency Lighting Units in LED luminaires

Important note: Read these instructions carefully and keep them safe. The user accepts the content of these instructions by installing the devices. Our batteries are shipped uncharged.

1.) Application and technical data
The LEL-type emergency lighting units are certified according to the standard EN 60598-2-22 and EN 61347-2-7 and are suited to be mounted in emergency lighting installations complying with the standards VDE 0108 and EN50172. The LEL emergency lighting units have to be used in combination with a mains converter (LED-driver) and an LED-array in an LED luminaire.
Conditions:
In order to use the LEL units in an LED luminaire, the following conditions have to be fulfilled:
1. It is possible to supply dc-current to the LED-array using only two wires. This means that no other signal or voltage is needed by the LED-array to emit light.
2. The wires for the positive and for the negative supply of the LED-array must be accessible.
3. If a current limitation circuit is included in the LED-array, which means that the LED-array normal supply is a regulated voltage (i.e. the mains converter is built as a voltage regulator), then the rated power of the LED-array under mains operation has to be smaller than the power supplied by the LEL unit under emergency.
4. The LED-Array current under maintained mode and when the LED is „on" should not exceed 2,5A.

Technical data

Mains voltage:	220V - 240V
Mains frequency:	50 / 60 Hz
Consumption in non-maintained mode:	3VA
Nominal operating time:	1h or 3h
Batteries:	NiCd, NiMH or $LiFePO_4$
Min. ambient temperature:	5°C
Max. ambient temperature:	50°C for emergency units
Charging time:	24h (48h for self-test)
Class of protection:	I
Degree of protection:	IP20
Certification:	CENELEC
Tested to:	EN 61347-2-7; EN 60598-2-22
Self-test according to:	EN 62034
Suitable for systems to:	DIN 0108 / EN 50172
Housing of:	sendzimir-galvanised steel sheet

Installation separated from luminaire: The length of the wires between the emergency lighting unit and the luminaire must be kept as short as possible.

2.) LED operating voltages – device type selection
The following values of operating voltages (maximum dc-values) are available: 55V, 105V or 220V. In order to elect the device type suited to the application, the design of the luminaire has to be considered:
- For accessible LED arrays in LED luminaires, in which the LED array voltage has to comply to the SELV requirements, the 55V types have to be used. Attention : The accessibility is tested using a standardised testfinger after removal of all covers which can be removed without tools or with usual tools (e.g. slotted screwdrivers).
- For other SELV-luminaires (i.e. SELV luminaires without accessible LED-arrays) the105V types have to be used.
- For not SELV luminaires the normal operating voltage with the LED-array switched on has to be taken into consideration as follows. The value of this working voltage is usually given on the label of the LED-converter.

Working voltage U	LEL device type
12Vdc < U < 55Vdc	55V
20Vdc < U < 105Vdc	105V
100Vdc < U < 220Vdc	220V

3.) Mounting
The emergency lighting units must be mounted at a suitable place in the luminaire (fixing-hole diameter 4 mm). In order to fulfill EMC-requirements, it is recommended to use wires as short as possible between the mains input terminal and the emergency lighting unit. This means that the emergency lighting unit should be placed between the mains input terminal and the mains converter (LED-driver).
Mount the battery at the coolest place inside the luminaire for maximum capacity and life. The ambient temperature of the battery must not exceed 50°C.
Emergency lighting units must not be in contact with materials which might ignite, melt or otherwise alter at 60°C. The units must not be used in hazardous environment.

4.) Electrical installation
The emergency lights must be installed according to locally applicable rules and regulations for electrical installations and for emergency lighting. The installation of emergency lighting units and luminaires must be done only by qualified personnel. The unit operates with voltages above 50 Volts. They are highly dangerous! All covers must be in place before energising the emergency lighting system. Make sure that the supply voltage is as indicated on the nameplate, and that the earth conductor is connected. Emergency lighting units must be connected as shown in the circuit diagram on the unit. Other wiring diagrams can be obtained on request.
The terminals are suitable for connecting one wire of 0.5 to 1.5mm2 (with 7-7.5mm isolation removal). After connection of the emergency luminaire to the direct line phase, the line is monitored and the batteries are continuously charged. This line must be connected to the same fuse as the normal room lighting (see diagram).

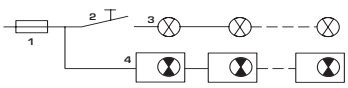

1. Fuse
2. Switch
3. Room lighting
4. Emergency lighting

5.) Check after installation
With emergency lighting units without automatic self-testing functionality, the green light-emitting diode (LED) shows that the battery is properly charged. If the LED is off for more than 5 minutes, the battery is not charged because of mains failure, missing battery or faulty charger.

6.) Maintenance
Locally applicable rules and regulations for maintenance and inspection of emergency lighting must be considered.
Before doing any maintenance work, carry out the following procedure:
1. Disconnect mains of the emergency lighting.
2. Remove covers.
3. Disconnect the battery from emergency lighting unit (plug).

Emergency lighting units must undergo a visual inspection in regular intervals.

7.) Battery regeneration
In order to optimize the battery capacity, all self-testing and wireless-units (standard and DALI-units being excluded) are programmed to perform an automatic battery regeneration process immediately after their first installation as well as after each battery change or resolved charging error. Three cycles are being executed, each cycle consisting of a 24h charging followed by a full discharge. No capacity measurement is made during these regeneration cycles.
Note: The battery regeneration process will not be performed after any battery discharge, even leading up to battery deep discharge protection, and also not after the full duration test of the self-testing units. Battery discharge is performed via the connected luminaire which operates in emergency mode during battery regeneration.

8.) Battery change
The batteries must be replaced if the operating time in emergency is less than 60 minutes with 1-hour units or 180 minutes with 3-hour units. This is indicated by emergency lighting units with built-in self-test. Only the supplier's original batteries may be used. Be sure that the battery is correctly connected. The battery wires of the emergency lighting unit are identified as follows:
red = + positive black = – negative

9.) Status indication for standard, non self-testing emergency lighting units
During normal mains operation the LED is green. During emergency operation or when the battery is fully discharged, the LED is not lighted (and remains white). When the battery is not or badly connected, the green LED is flashing.

10.) Status indication for self - testing emergency lighting units (S)
All the clauses 1.) to 6.) of this instruction are also valid for -S units.
Emergency lighting units with built-in self-test facility test themselves independently in regular intervals. Every about 8 days (random period : 8 to 8.25 days) the correct operation of the luminaire is automatically tested. The unit, the LED-array and the battery are controlled. Once a year the capacity of the battery is measured by simulating a power failure in addition to the operational test. The operational status of emergency lights with built-in self-test is indicated by a bicolour LED on the unit.

Visual status indication:

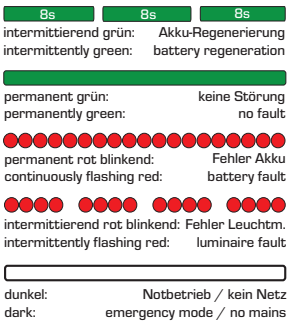

Luminaires containing emergency lighting units with automatic self-test require only a regular visual inspection of the status indicator (LED) and the fitting.
LED intermittently green: battery regeneration (see item 7)
LED permanently green: no fault – normal state
LED continuously flashing red: Faulty battery either due to insufficient capacity or interrupted connection. The alarm is reset once the fault is cleared.
LED intermittently flashing red: Luminaire not connected or defective. The fault is not indicated (or reset) immediately after it occurs (or is cleared), but only after the following self-test.
LED dark (LED is off): Faulty unit or missing mains voltage if status LED does not light up after max. 5 minutes.

11.) Computer addressable units -SRM or -DALI
All the clauses 1 to 6 of this instruction also apply to -SRM and -DALI units, Computer addressable emergency lighting units with automatic self-test are coded by the manufacturer or on-site with serial numbers. Detailed instructions for the planning, layout, installation, starting up and service of the computer addressable systems are available on request.

12.) Notes / Product liability
It must be kept in mind that the maximum voltage which can appear on the on the LED-array in case of LED-array failure, can reach 60V, 120V or 300V with 55V-, 105V- or 220V-types. The requirements of the standard EN60598-1 regarding security have still to be fulfilled. The user of module has the full responsibility of compliance to the EN60598-1 standard. Any liability regarding this compliance or to type selection will be denied by the module manufacturer.
The manufacturer disclaims all liability for direct, indirect or incidental damage caused by use or installation of emergency lighting units not complying to all points detailed in the present instruction sheet. The manufacturer is also not liable for third party claims arising from use or installation not complying to the present instructions. The emergency lighting units must not be opened or modified in any way. The components of emergency lighting luminaires may be replaced only by original spare parts.
The Guaranty on batteries is only valid when original batteries shipped by the unit manufacturer are being used. This statement is also applicable in case of self-testing units.
Luminaires and/or emergency lighting units must not be used if they have damages which suggest that danger-free operation may not be possible.
We reserve the right to alter without prior notice illustrations, weights, dimensions or other such information stated in the catalogue or instruction manuals if this proves expedient or is dictated by technical progress.
The emergency lighting units are patented. Infringement will be prosecuted.

Instruction for installation and use of LELK, LELT and LELM Emergency Lighting Units in LED luminaires

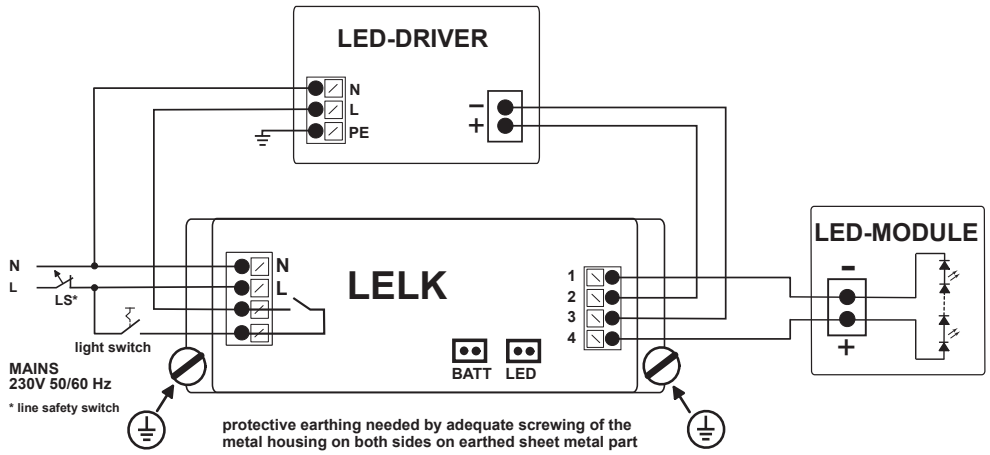

Connections diagram for LELK

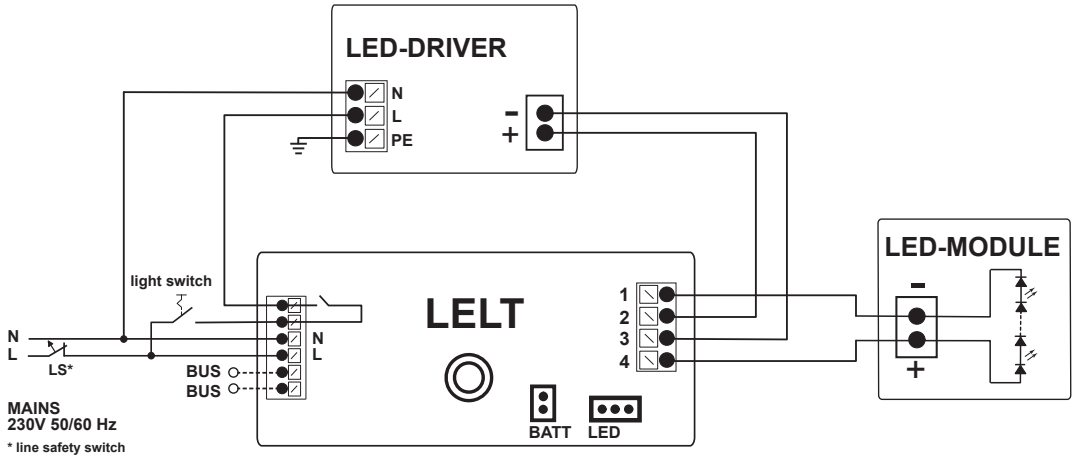

Connections diagram for LELT

◎ = reinforced insulation between LED-module and mains

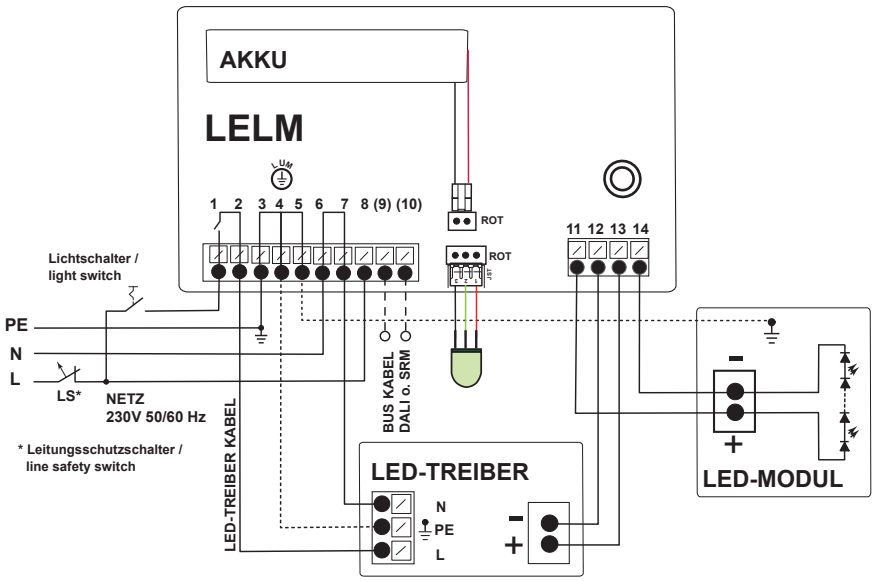

Connections diagram for LELM

◎ = verstärkte Isolierung zwischen LED-Modul und Netz / reinforced insulation between LED-module and mains

⏚ LELM ERDE: funktionelle Erdung nicht nötig
Erdung als Berührungsschutz nicht nötig
LELM EARTH: no protective earthing needed
no functional earthing needed